THREE SAFETY DEVICES FOR THE HEART-LUNG MACHINE

FREDERICK OLMSTED, and WILLEM J. KOLFF, M.D.,
Division of Research

and

DONALD B. EFFLER, M.D.
Department of Thoracic Surgery

THE most important single cause of pulmonary damage arising from the use of a heart-lung machine is overfilling of the pulmonary vascular bed.[1] To avoid such overfilling, the following methods and devices have been developed and are described in this paper: (1) a precise automatic control of blood volume in the oxygenator to prevent forward overloading of the lungs by changes in volume; (2) an open reservoir in the venous line to preclude the possibility of drawing the walls of the venae cavae into the openings of the cannulae, thereby occluding them; (3) a cannula in the left atrium (a) to monitor left atrial pressure, and (b) to permit release of blood from the left atrium to avert build-up of pressure and retrograde overfilling of the pulmonary vascular bed.

Automatic Control of Pump

The blood level or volume in most oxygenation chambers cannot be assessed with sufficient accuracy by the unaided eye. Since the azygos flow or "small" flow principle[2] is no longer used, large blood flows make it exceedingly trying to maintain both a smooth perfusion and a stable blood volume in the machine by manual control. At times of abrupt changes of pressure in the line, which occasionally occur, satisfactory manual control is impossible. At a flow of five liters of blood per minute, a disturbance lasting 24 seconds can increase or decrease a patient's blood volume by two liters. At the onset or at the end of a cardiac bypass, when there are no occluding tapes around the venae cavae, an abrupt overloading of the right side of the heart may take place. The increased pressure in the right side is then transmitted through the pulmonary artery to the lungs, and may lead to capillary damage within a fraction of a minute. With the high flow rate now employed, human reaction time has become too slow for adequate manual control of mechanical-heart pumps.

Present pump oxygenator. The heart-lung machine in present use here is a rotating disc oxygenator*[3] with two nonocclusive roller type of pumps,** the venous pump removing blood via an adjustable gravity-fed venous reservoir from the venous circulation, and the other (arterial pump) returning it to the arterial tree. The venous pump supplies the oxygenation chamber; the arterial pump drains it. The oxygenation chambers are 9, 13, and 20 inches long and each is 5½ inches in diameter. The pumps originally were manually controlled

Experimental work leading to this project was supported by a grant to Doctor Kolff from the Cleveland Area Heart Society.

**Björk type of oxygenator modified by Kay and Cross, manufactured by Pemco, Inc., Cleveland, Ohio.*

***Designed, made, and donated by Mr. L. C. Hercik of the Hill Acme Company, Cleveland, Ohio.*

and still can be manually regulated by two variacs* (variable autotransformers) which supply rectifiers for series field and armature current for the electric motors.**

Automatic control. A simple blood-level detector connected to the controls of the pump motors was constructed to duplicate rapidly and automatically the function of the machine operator. The detector, monitoring the blood level in the oxygenator, consists of three pointed platinum-wire electrodes and one grounded platinum-wire electrode as originally used by Clark and Gollan.[4] These electrodes make contact with the blood in a small (1-inch diameter) siliconized glass vessel connected to the oxygenator so that the level of the liquid in the glass vessel duplicates that in the oxygenator. The three platinum contacts (Fig. 1) are grouped in a ⅝-inch diameter circle in a horizontal plane, and also each electrode point is vertically separated 0.5 mm. from the others. The lowest is called number 1; the center electrode, number 2; the highest, number 3. The ground or indifferent electrode projects 1 cm. below the others. All are mounted on a vertically adjustable gear rack† so that their tips can be positioned for the desired blood level in the oxygenator.

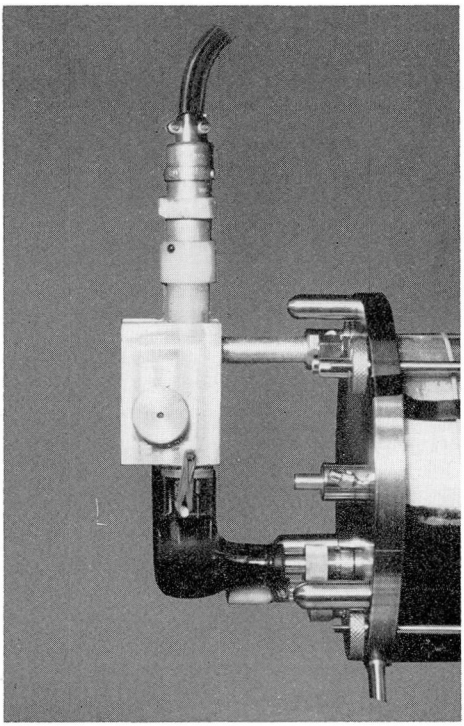

Fig. 1. Level detector. One platinum point touches the liquid in the oxygenator. The knob vertically positions all electrodes simultaneously to adjust the blood level.

**Type 1703A motor control, General Radio Corporation, Cambridge, Massachusetts.*

***D. C. Motor type DM, Master Electric Co., Dayton, Ohio.*

†Mr. Ben Matthews, Lucerne Products, Northfield, Ohio, made and donated the adjustable gear rack, and was most helpful in developing the present automatic device.

The action of the electrodes as they make or break contact with the blood surface is as follows: the lowest, number 1, turns off the arterial pump when contact is broken, and starts it when contact is renewed. The middle one, number 2, the chief regulator, increases the speed of the arterial pump when contact is made, decreases it when contact is broken. The highest, number 3, turns off the venous pump on contact, and restores action when contact is broken. The main function of the electrodes is to keep the blood level, under any condition, between the highest and the lowest electrodes, but most of the time the blood level is maintained in a slight oscillation about the center electrode. If the venous outflow tube or arterial tube is suddenly blocked during a partial perfusion, the blood volume is maintained and the perfusion rate is adjusted so quickly that there is little change in the patient's mean systemic pressure and none in the electroencephalogram.

The relation of the blood level to the electrodes is indicated by four vertically placed panel lights: flashing of the red lights at top and bottom indicates conditions needing attention; alternate flashing of the two green lights in the center (alternation signifies oscillation around the center electrode) indicates satisfactory operation. The electric circuit is shown in Figure 2. The sensing voltage is supplied by a negative 15-volt supply through 1,000,000-ohm resistors, so that from each contact no more than 15 millionths of an ampere is introduced into the blood, and the electrodes do not polarize.

Each contact operates through blood to the ground electrode bringing the grid bias of a vacuum triode to zero, thus allowing the tube to conduct. A large variation in electrode resistance such as 10,000 ohms does not affect contact action. Each tube operates a double-pole, double-throw relay; these in turn control the pumps and indicator lights.

The operator must establish a basic differential in pumping speed. Depending on the resistance of the cannula, the speed of the arterial pump may have to be twice as great as that of the venous pump. R1 is a power potentiometer whose two arms supply alternating current to the rectifiers for the series fields and armature windings of the pump motors. Its setting adjusts the difference in the speeds of the arterial and venous pumps. T1 is a single variac transformer that controls the over-all rate of perfusion. R2 establishes the two "hunting" speeds of the arterial pump. For correct operation one of these two arterial pumping rates is slightly faster and the other slightly slower than that of the venous pump. The monitor panel contains but three controls: the variac, T1, the differential potentiometer, R1, and a multiple-pole double-throw switch, S1, to shift action from manual to automatic. The panel and automatic control box are mounted between the two roller pumps (Fig. 3). Extensive testing has shown that the automatic device is reliable.

Open Venous Reservoir

There is an open venous reservoir in the tube from the venae cavae to the patient (Fig. 4). By adjustment of the height of the reservoir, the negative

pressure can be varied from 0 to 65 cm. of water (0 to 50 mm. of Hg). Occasionally rather high gravitational pull is necessary because of the use of small venous cannulae, which are preferred to large ones. When the venous reservoir is lifted above the level of the patient, it may be used for transfusion of blood.

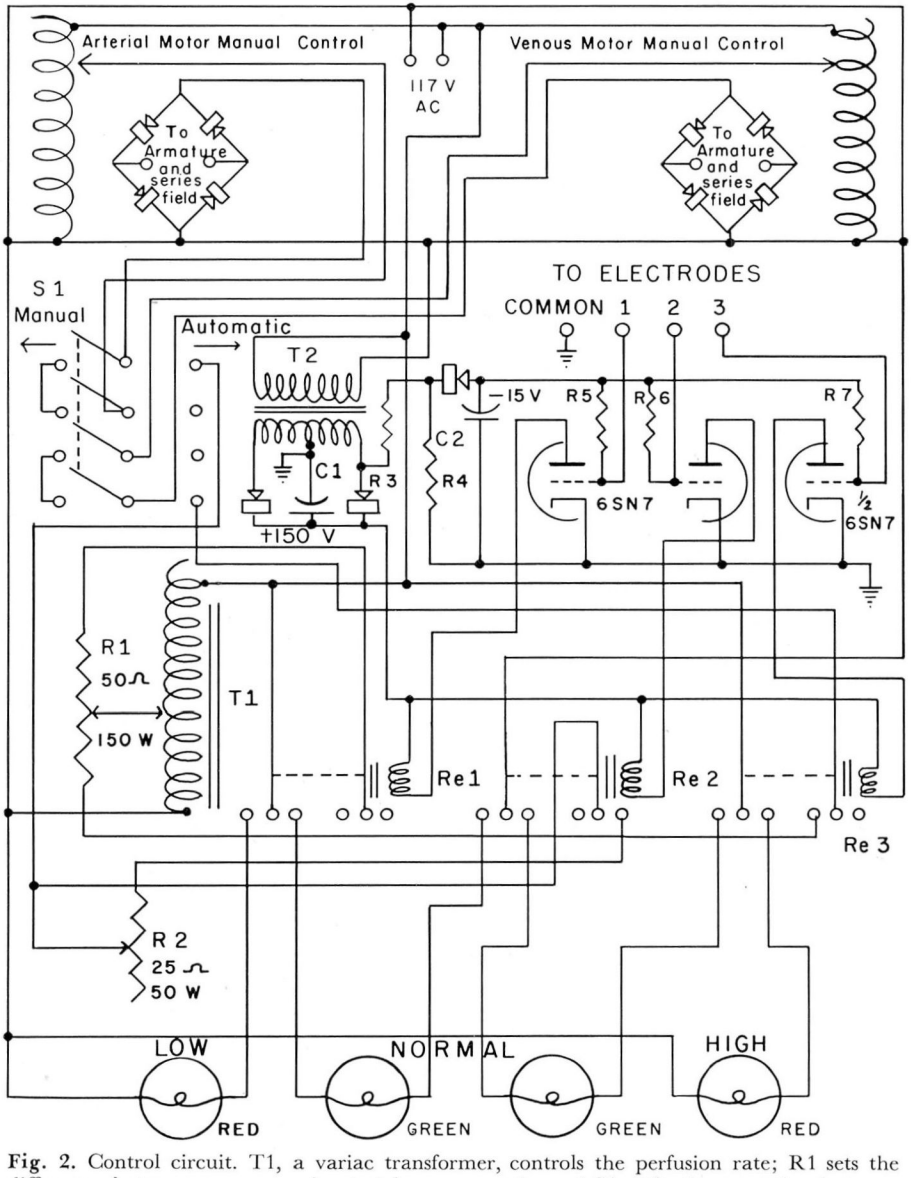

Fig. 2. Control circuit. T1, a variac transformer, controls the perfusion rate; R1 sets the difference between venous and arterial pump speeds; and S1 shifts the operation between automatic and manual.

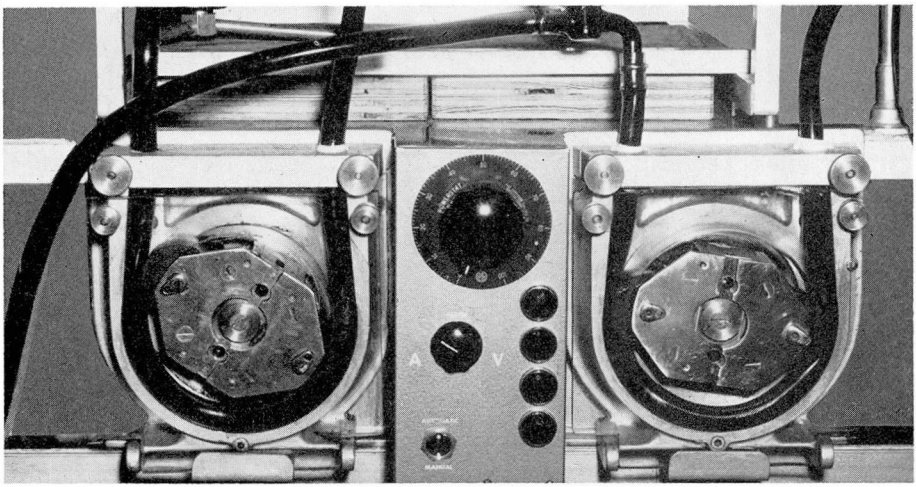

Fig. 3. Automatic control unit mounted between pumps. Location of controls is noted in Figure 4.

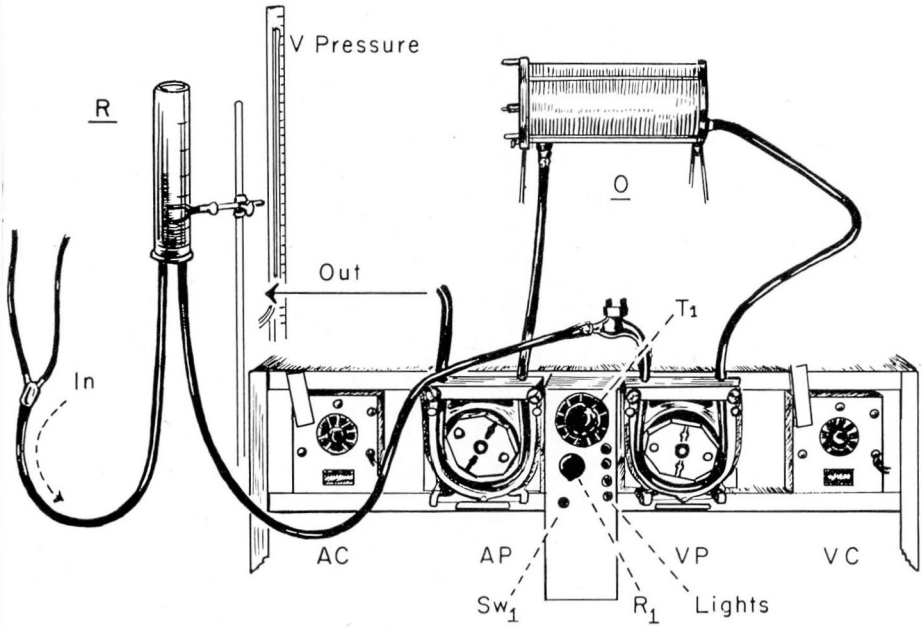

Fig. 4. Open venous reservoir, R, in the line from the patient. This is a 2-inch diameter vinyl tube, the height of which can be adjusted on the vertical rod. Near it is a manometer connected to a saphenous vein. O is the disc oxygenator, VP and AP are venous and arterial pumps, respectively, and VC and AC are their respective manual controls.

The regulation of the level in this reservoir is not automatic, but the adjustment of its height is simple. Because of its tall cylindrical shape, the blood level is easy to see; the main automatic control variac, T1, is then adjusted to maintain the level in the venous reservoir, that is, to handle all of the flow from the patient.

Left Atrial Cannula

The necessity of providing drainage from the left atrium has been recently stressed.[1] Mechanical impediment to the left atrial outflow (aortic insufficiency and mitral insufficiency) and dynamic impediment (ventricular fibrillation or ineffective left ventricular beat) may lead to retrograde pulmonary overloading with fatal capillary damage. Figure 5 shows the arrangements of the left atrial drainage.

Aspiration of the left atrial line is required only when large amounts of air have entered it. Otherwise it is sufficient to open the connecting tube to the venous reservoir; blood from the left atrium is thereby returned to the patient

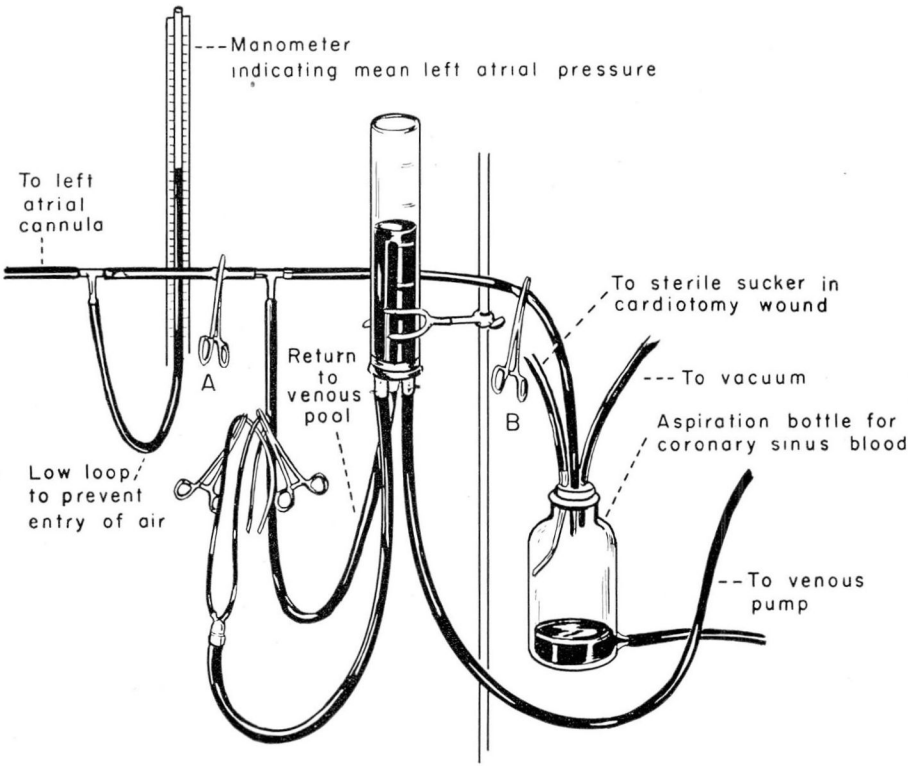

Fig. 5. Connections of left atrial cannula. Opening clamp A allows atrial blood to drain into the venous reservoir and hence back into the patient. If necessary, moving clamp A to the reservoir line and opening clamp B aspirates the cannula.

via the mechanical circulation with a minimum of handling. The manometer (vertical section) is used to ascertain whether the left atrial pressure is elevated. Elevation of that pressure may indicate that the patient should be maintained longer on the mechanical circulation.

It is important that the left atrial cannula not be exposed to negative pressure or to suction from the machine when the left heart is in any way open to the atmosphere, lest air be aspirated into the cavities of the heart.

Results

To date, the *device for automatic controls of the pump* has been used during 30 cardiotomies with total heart-lung bypass. After initial adjustments were made it worked smoothly. The efficiency of the device was proved recently when during a partial bypass the arterial outflow line became blocked: no changes in blood volume of the patient occurred. Before each run the controls are checked by raising and lowering the blood level in the oxygenator from a burette. With the use of a 9-inch oxygenator, a change of 75 ml. (1 mm. in height) of blood will operate all control lights; and with the 20-inch oxygenator, 125 ml. will do so. The automatic control can be switched to manual control instantaneously. In case of power failure, hand cranks can be snapped into the pump rotors within 10 seconds.

With the use of the open venous reservoir, the "vascular wall occlusion phenomenon" of the venous cannulae has not occurred. With the use of the left atrial cannula, increased pressure in the left atrium has been avoided, but the possibility of its occurrence during perfusions was proved by temporary (15 seconds) clamping of the outlet tube from the atrium to the venous reservoir.

Summary

Three devices are described to prevent overfilling of the pulmonary vascular bed and the disastrous pulmonary capillary damage that follows.

1. A device for automatic control of the blood volume of the Kay and Cross oxygenator consists of electrodes with a sensing voltage of 15 volts with no more than fifteen millionths of an ampere current. Volume changes of less than 125 ml. regulate the pumps.

2. An open venous reservoir, adjustable in siphon height, controls the venous outflow and prevents occlusion of the cannulae by the vascular walls being drawn into the tube openings.

3. A cannula in the left atrium monitors left atrial pressure, and through it blood may be released, if necessary, into the machine to avoid retrograde pulmonary overloading.

Erratum

In a previous paper[5] describing an electronic cardiac pacemaker and its use, reference to past significant work in this field by Hellerstein, Shaw, and Liebow[6] was omitted through an unfortunate oversight.

References

1. Kolff, W. J.; Effler, D. B.; Groves, L. K.; Hughes, C. R., and McCormack, L. J.: Pulmonary complications of open-heart operations: their pathogenesis and avoidance. Cleveland Clin. Quart. **25**: 65-83, 1958.

2. Warden, H. E.; Cohen, M.; Read, R. C., and Lillehei, C. W.: Controlled cross circulation for open intracardiac surgery; physiologic studies and results of creation and closure of ventricular septal defects. J. Thoracic Surg. **28**: 331-343, 1954.

3. Björk, V. O.: Artificial heart or cardiopulmonary machine; performance in animals. Lancet **2**: 491-493, 1948.

4. Clark, L. C.; Hooven, F., and Gollan, F.: Large capacity, all glass oxygenator and pump. Rev. Sci. Inst. **23**: 748-753, 1952.

5. Olmsted, F.; Kolff, W. J., and Effler, D. B.: Electronic cardiac pacemaker after open-heart operations: report of case of tetralogy of Fallot with atrioventricular block that reverted to sinus rhythm. Cleveland Clin. Quart. **25**: 84-91, 1958.

6. Hellerstein, H. K.; Shaw, D., and Liebow, I. M.: Proceedings of Twenty-third Annual Meeting. 55. Extracorporal electronic by-pass of A-V node. J. Lab. & Clin. Med. **36**: 883, 1950.